sales@clalighting.co.nz
Tel: +64 9 427 6133 | Fax: +64 9 427 6134

INFRARED MOTION SURFACE MOUNTED SENSOR - SENS004

Specification

Part No.	**SENS004**
Mounting Type	Surface Mounted
Input voltage	220-240V AC 50/60Hz
Detection Range	360⁰
Detection Distance	6m Max (<24⁰C)
Detection Motion Speed	0.6-1.5m/s
Rated Load	2000W HAL/ 1000W CFL/ 1000W LED (If lamp higher than 60W is used the distance between lamp & sensor should be a minimum of 60cm)
Time Delay	Min.10sec±3sec Max.15min±2min (restarts from last movement)
Ambient Light	<3-2000lux (adjustable)
Ambient Temp	-20 to +40⁰C
Working Humidity	<93%RH
Power Consumption	approx 0.5W
Installation Height	2.2-4m
Housing Material	PC
IP Rating	IP20
Warranty	5 year replacement warranty

SENS004

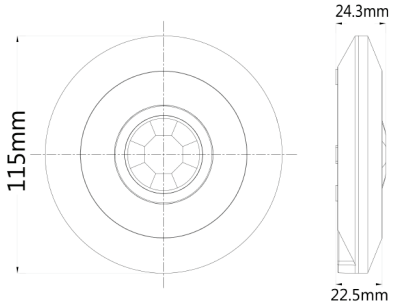

- **UV resistant**
- **3 wire**
- **Day/Night recognition**
- **Manual override**

(1) To operate as a light only (i.e. override sensor), turn power off for 3 seconds and then back on

(2) To reverse the override function (i.e. re-introduce the use of the sensor), turn power off for 10 seconds and then back on

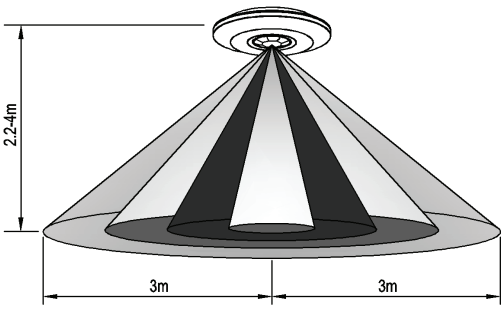

Height of installation: 2.2-4m

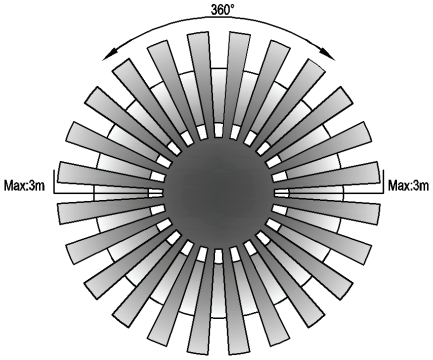
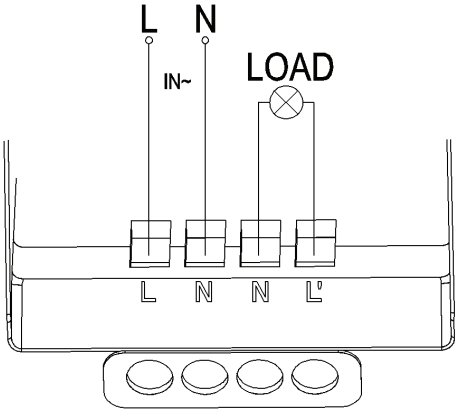
Detection Distance: Max.6m